Jul.1.2025 Copyright 2025 HIROSE ELECTRIC CO., LTD. All Rights Reserved.
In case of consideration for using Automotive equipment / device which demand high reliability, kindly contact our sales window correspondents.

APPLICABLE STANDARD		USB2.0 SPECIFICATION AND MICRO-USB CABLE AND CONNECTORS SPECIFICATION.			
RATING	OPERATING TEMPERATURE RANGE	−30°C TO +85°C	STORAGE TEMPERATURE RANGE	−30°C TO +60 °C	
	VOLTAGE	30 V AC	CURRENT	SIGNAL ONLY	1.0 A/pin
				POWER APPLY	1.8 A/pin (PIN No.1,No.5)
					0.5 A/pin (PIN No.2-No.4)

SPECIFICATIONS

ITEM	TEST METHOD	REQUIREMENTS	QT	AT
CONSTRUCTION				
GENERAL EXAMINATION	VISUALLY AND BY MEASURING INSTRUMENT.	ACCORDING TO DRAWING.	X	X
MARKING	CONFIRMED VISUALLY.		X	X
ELECTRIC CHARACTERISTICS				
CONTACT RESISTANCE	100 mA (DC OR 1000 Hz).	30 mΩ MAX.	X	X
INSULATION RESISTANCE	500 V DC.	1000 MΩ MIN.	X	X
VOLTAGE PROOF	100 V AC FOR 1 min.	NO FLASHOVER OR BREAKDOWN.	X	X
CAPASITANCE	MEASURE ADJACENT TWO CONTACTS AT 1000±10 Hz AC VOLTAGE.	2 pF MAX.	X	—
MECHANICAL CHARACTERISTICS				
INSERTION AND WITHDRAWAL FORCES	A MAXIMUM RATE OF 12.5 mm/min. MEASURED BY APPLICABLE CONNECTOR.	INSERTION FORCE 35 N MAX. WITHDRAWAL FORCE 8 N MIN.	X	—
MECHANICAL OPERATION	10000 TIMES INSERTIONS AND EXTRACTIONS. MATING SPEED - MECHANICALLY OPERATED: 500 CYCLES / h OR - MANUALLY OPERATED: 200 CYCLES / h	1) CONTACT RESISTANCE: NO INCREASE OF MORE THAN 10 mΩ FROM INITIAL VALUE. 2) INSERTION FORCE 35 N MAX. WITHDRAWAL FORCE 8 N MIN. 3) NO DAMAGE, CRACK AND LOOSENESS, OF PARTS.	X	—
VIBRATION	FREQUENCY 10 TO 55 Hz SINGLE AMPLITUDE 0.75 mm, AT 2h FOR 3 AXIAL DIRECTIONS, TOTAL 6h.	1) NO ELECTRICAL DISCONTINUITY OF 1 μs. 2) NO DAMAGE, CRACK AND LOOSENESS, OF PARTS.	X	—
RANDOM VIBRATION	FREQUENCY 50 TO 2000 Hz AT 15 min FOR 3 AXIAL DIRECTIONS.		X	—
SHOCK	490m/s^2 DURATIONS OF PULSE 11 ms AT 3 TIMES FOR 6 DIRECTIONS, TOTAL 18 TIMES.		X	—
ENVIRONMENTAL CHARACTERISTICS				
THERMAL SHOCK	TEMP -55 →+15 TO +35→+85→+15TO+35 °C TIME 30 → 2 TO 3 → 30→ 2 TO 3 min UNDER 10 CYCLES. (MATING APPLICABLE CONNECTOR)	1) CONTACT RESISTANCE: 70 mΩ MAX. 2) INSULATION RESISTANCE: 10 MΩ MIN. 3) NO DAMAGE, CRACK AND LOOSENESS, OF PARTS.	X	—
HUMIDITY LIFE	TEMPERATURE -10～65 °C, HUMIDITY 90 TO 98 %, UNDER 7 CYCLES (168 h) (MATING APPLICABLE CONNECTOR)	NO DAMAGE, CRACK AND LOOSENESS, OF PARTS.	X	—
DRY HEAT	EXPOSED AT 85±2 °C , 96 h. (MATING APPLICABLE CONNECTOR)	NO DAMAGE, CRACK AND LOOSENESS, OF PARTS.	X	—
COLD	EXPOSED AT -40±2 °C , 96 h. (MATING APPLICABLE CONNECTOR)	NO DAMAGE, CRACK AND LOOSENESS, OF PARTS.	X	—
CORROSION SALT MIST	EXPOSED AT 5 % SALT WATER, 35 °C, FOR 48h. (LEFT UNDER UNMATED CONDITION.)	NO HEAVY CORROSION OF CONTACTS.	X	—

	COUNT	DESCRIPTION OF REVISIONS	DESIGNED	CHECKED	DATE
0					

REMARK
HIROSE will not guarantee the performance on these specifications in case this product will be mated with the others which is not HIROSE's.

Unless otherwise specified, refer to USB2.0, EIA364 or IEC 60512.

APPROVED	NM. NISHIMATSU	15. 10. 27
CHECKED	KN. ICHIKAWA	15. 10. 27
DESIGNED	TS. ITO	15. 10. 27
DRAWN	AK. AKIYAMA	15. 10. 27

Note QT:Qualification Test AT:Assurance Test X:Applicable Test

DRAWING NO. ELC-126264-30-00

HRS	SPECIFICATION SHEET	PART NO.	ZX62D-AB-5P8(30)	
	HIROSE ELECTRIC CO., LTD.	CODE NO.	CL242-0027-5-30	0 1/2

FORM HD0011-2-1

SPECIFICATIONS

ITEM	TEST METHOD	REQUIREMENTS	QT	AT
SOLDERABILITY	SOLDERING POINT IMMERSED IN SOLDER BATH OF 255±5°C, 5 sec. (USING TYPE R FLAX)	SOLDER SHALL COVER MINIMUM OF 95% OF THE SURFACE BEING IMMERSED	X	–
RESISTANCE TO SOLDERING HEAT	A PROFILE IS SHOWN IN FIG-1, UNDER 2 CYCLES.	NO DAMAGE, CRACK AND LOOSENESS, OF PARTS.	X	–

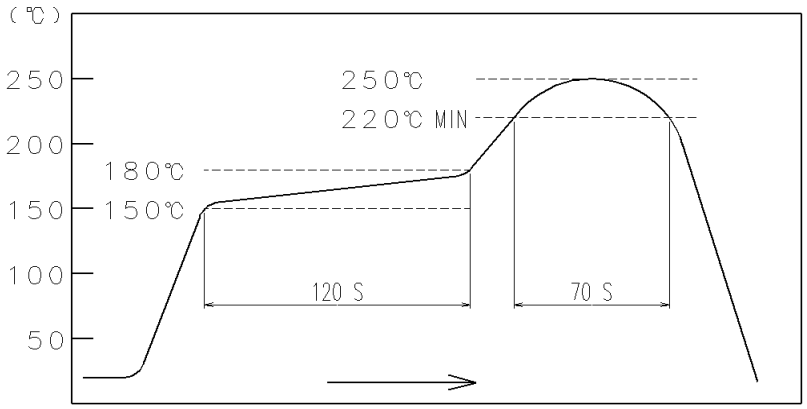

FIG – 1 RESISTANCE TO SOLDERING HEAT
(TEMPERATURE AT TOP SURFACE OF CONNECTOR)

RECOMMENDED PROFILE REFERS TO FIG – 2.
(TEMPERATURE AT SMT LEADS)

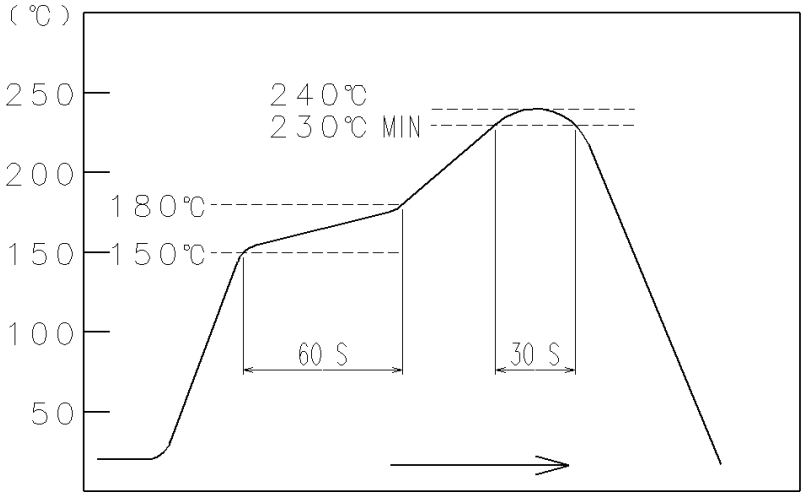

FIG – 2 RECOMMENDED REFLOW PROFILE TEMPERATURE

Jul.1.2025 Copyright 2025 HIROSE ELECTRIC CO., LTD. All Rights Reserved.
In case of consideration for using Automotive equipment / device which demand high reliability, kindly contact our sales window correspondents.