8251A
PROGRAMMABLE COMMUNICATION INTERFACE

- **Synchronous and Asynchronous Operation**
- **Synchronous 5–8 Bit Characters; Internal or External Character Synchronization; Automatic Sync Insertion**
- **Asynchronous 5–8 Bit Characters; Clock Rate—1, 16 or 64 Times Baud Rate; Break Character Generation; 1, 1½, or 2 Stop Bits; False Start Bit Detection; Automatic Break Detect and Handling**
- **Synchronous Baud Rate—DC to 64K Baud**
- **Asynchronous Baud Rate—DC to 19.2K Baud**
- **Full-Duplex, Double-Buffered Transmitter and Receiver**
- **Error Detection—Parity, Overrun and Framing**
- **Compatible with an Extended Range of Intel Microprocessors**
- **28-Pin DIP Package**
- **All Inputs and Outputs are TTL Compatible**
- **Available in EXPRESS and Military Versions**

The Intel 8251A is the industry standard Universal Synchronous/Asynchronous Receiver/Transmitter (USART), designed for data communications with Intel's microprocessor families such as MCS-48, 80, 85, and iAPX-86, 88. The 8251A is used as a peripheral device and is programmed by the CPU to operate using virtually any serial data transmission technique presently in use (including IBM "bi-sync"). The USART accepts data characters from the CPU in parallel format and then converts them into a continuous serial data stream for transmission. Simultaneously, it can receive serial data streams and convert them into parallel data characters for the CPU. The USART will signal the CPU whenever it can accept a new character for transmission or whenever it has received a character for the CPU. The CPU can read the complete status of the USART at any time. These include data transmission errors and control signals such as SYNDET, TxEMPTY. The chip is fabricated using Intel's high performance HMOS technology.

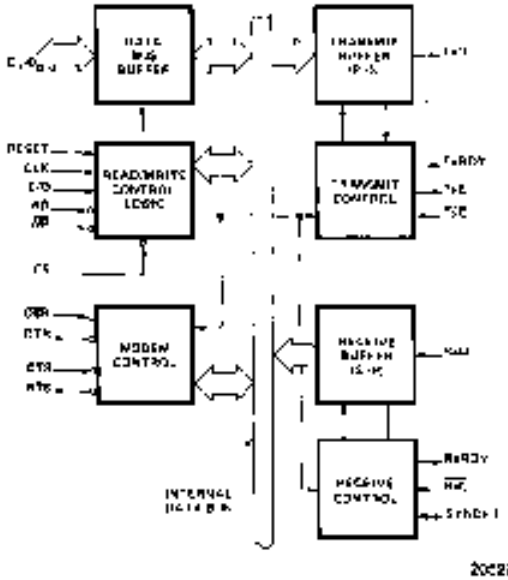

20C242–1

Figure 1. Block Diagram

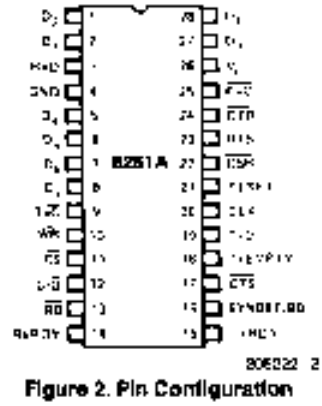

20C242–2

Figure 2. Pin Configuration

The complete document for this product is available on Intel's "Data-on-Demand" CD-ROM product. Contact your local Intel field sales office, Intel technical distributor, or call 1-800-548-4725.

September 1983
Order Number: 205272-003